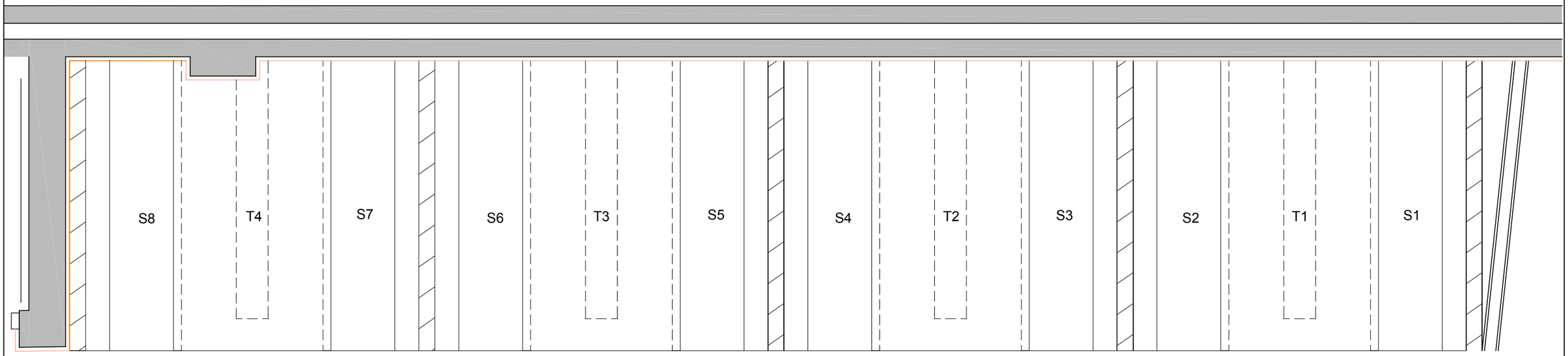

FIXED FURNITUR TO BE 18mm LAMINATED MDF ON 75mm x 100mm SOFTWOOD FRAMES. LAMINATE TO BE EGGER (COLOUR TBC)
SEATING TO BE UPHOLSTERED USING FIRE RETARDANT FOAM TOGETHER WITH APPROPRIATE "CLASS A" FIRE RETARDANT FABRIC.

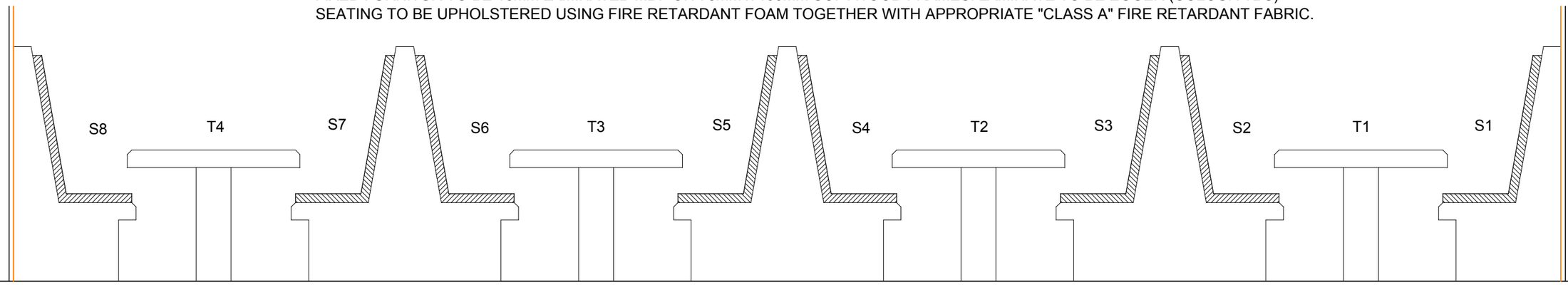

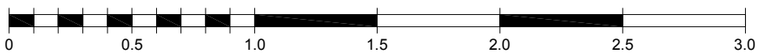

Truline

Client	Drawn by	Date	Checked	Date		Scale @ A3
St Helens Chamber Ltd	SO	01/18	DB	01/18		1:25

Job title	Job no	CPI cat	Dwg no	Revision
Starting Point Refurbishment	P2497	(SO)	105	-
Drawing title: Proposed Furniture				

Rev	Date	Revision Note	By	Check
-	-	-	-	-